MML SERIES MASTER METERING SYSTEMS FOR LPG

MML1999 range
Product Data

A publication of LPG Measurement Technology (Australia) Pty. Ltd.

LPG Measurement Technology Pty. Ltd.
85A Cantebury Rd Kilsyth Victoria Australia
Ph: +[613] 97618788 Fax: +[613] 97618799

Copyright © 1999 LPG Measurement Technology (Australia) Pty. Ltd.
Unauthorised use, copying or distribution prohibited.

MS and Windows are trademarks of Microsoft Corporation
MasterCal is a registered trademark of LPG Measurement Technology Pty. Ltd.

CONTENTS

CONTENTS **3**

LIST OF FIGURES **4**

LIST OF TABLES **4**

INTRODUCTION **5**

BASIC OPERATION 5
TRANSPORTABILITY 7
PRODUCT MODELS 9

SYSTEM DATA **9**

HYDRAULIC SYSTEM DATA 9
Specifications *11*
MASTERCAL STANDARD SOFTWARE DATA - ENTRY-LEVEL DATA AQCUISITION 11
Key software components *12*
Specifications *15*
MASTERCAL DELUXE SOFTWARE DATA - COMPLETE CALIBRATION MANAGEMENT 15
Key components of the software *16*
Specifications *24*

CONTACT US **25**

Copyright © 1999 LPG Measurement Technology (Australia) Pty. Ltd.
Unauthorised use, copying or distribution prohibited.

LIST OF FIGURES

Figure 1: LPG Master Meter 6
Figure 2: Typical arrangement for calibration of an LPG dispenser using a master meter 7
Figure 3: Master Meter installed in service van 8
Figure 4: Master Meter installed in service van (closeup) 8
Figure 5: Master Meter hydraulic section 10
Figure 6: MasterCal Standard Control Center 12
Figure 7: MasterCal calibration live-action snapshot 13
Figure 8: MasterCal Standard calibration run summary 14
Figure 9: MasterCal Standard information window 14
Figure 10: MasterCal Deluxe Control Center 17
Figure 11: Master Meter results entry 18
Figure 12: Unit under test results entry 19
Figure 13: MasterCal Deluxe report (demonstration) page 1 21
Figure 14: MasterCal Deluxe report (demonstration) page 2 22
Figure 15: MasterCal Deluxe report (demonstration) page 3 23

LIST OF TABLES

Table 1: LPG Master Meter product number 9
Table 2: Hydraulic section specifications 11
Table 3: MasterCal Standard specifications 15
Table 4: MasterCal Deluxe specifications 24

Copyright © 1999 LPG Measurement Technology (Australia) Pty. Ltd.
Unauthorised use, copying or distribution prohibited.

INTRODUCTION

This document provides important information and data for the MML series of LPG Master Meter by LPG Measurement Technology (Australia) Pty. Ltd.

The MML series of LPG Master Meters are high-precision, fast, compact and efficient systems for calibration of commercial LPG dispensers.

For over 6 years LPG Measurement Technology has been producing world-class master meters for LPG. The latest revisions of our product put state-of-the-art measurement and performance at your fingertips.

The master metering series provide a wide range of features and benefits:

- Streamlined, accurate hydraulics
- Small footprint. Measuring approximately 550x500x600mm (HWD). Fits easily into a standard service van. Can be lifted easily by two people.
- Patented electronic density measurement and vapour elimination system
- Full PC-based control, acquisition and storage of calibrations[1]
- Automatic PC-based temperature, density and pressure correction[1]
- Automatic PC-based management of temperature, pressure and density measurement devices, with automatic scale correction[1]
- Complete storage of calibration data, providing a detailed audit trail[1]

Detailed information on the specifications and operation of the MML series of LPG Master Meters follows.

Basic Operation

A diagram of a MML series master meter is shown in Figure 1 below.

[1] Depends on software configuration selected

Copyright © 1999 LPG Measurement Technology (Australia) Pty. Ltd.
Unauthorised use, copying or distribution prohibited.

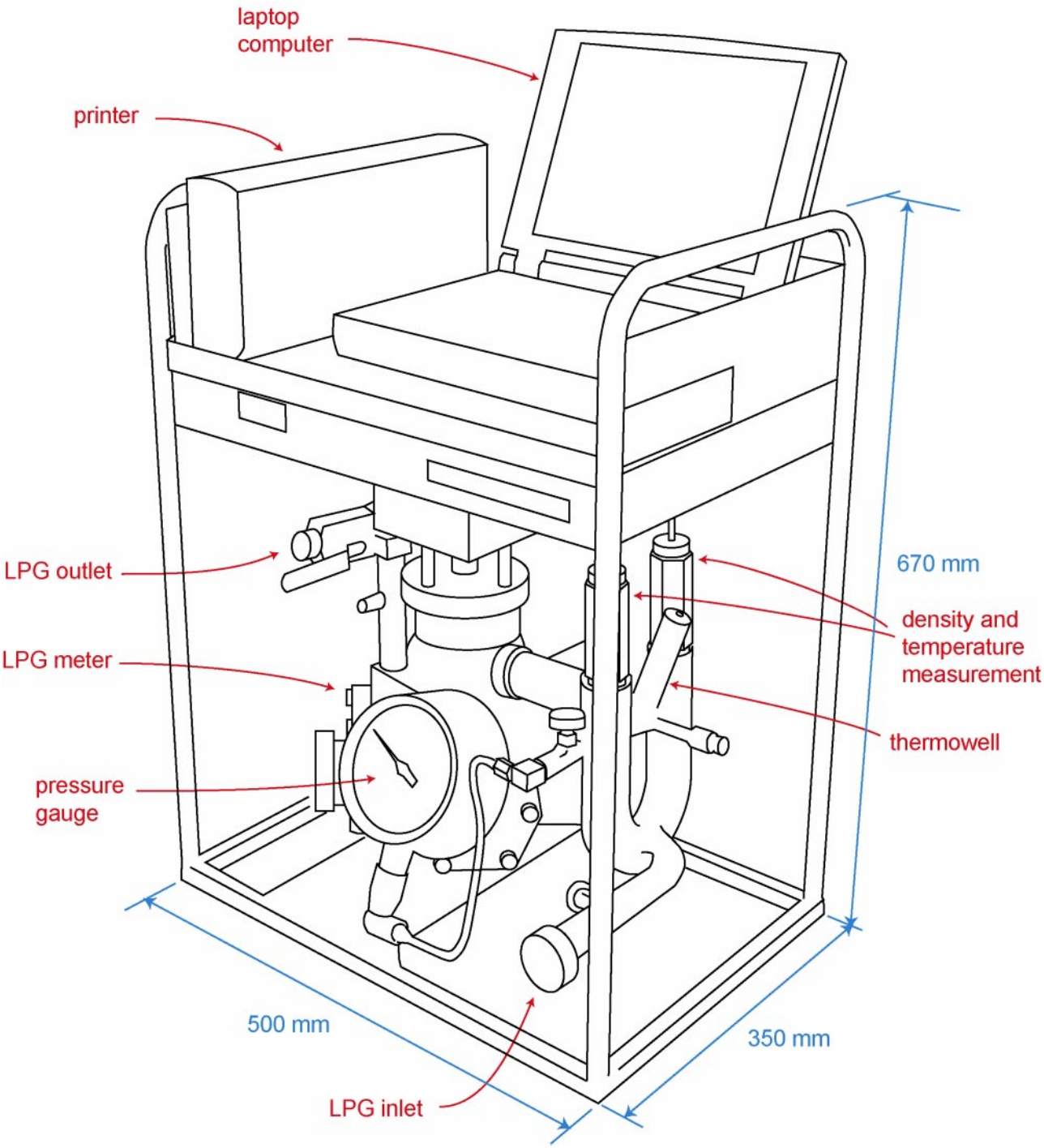

Figure 1: LPG Master Meter

The master meter is connected in-line with the "unit under test" (the LPG dispenser) to form a circuit for the LPG to travel, as shown in Figure 2 below.

Copyright © 1999 LPG Measurement Technology (Australia) Pty. Ltd.
Unauthorised use, copying or distribution prohibited.

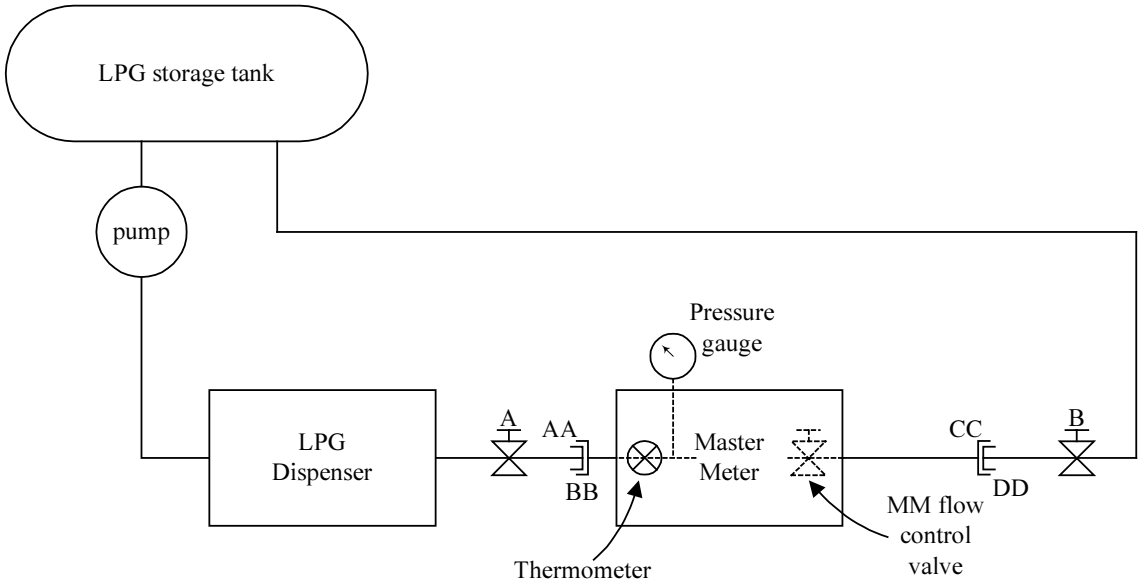

Figure 2: Typical arrangement for calibration of an LPG dispenser using a master meter

A number of "calibration runs" are performed. This involves passing a certain volume of LPG (typically between 40 and 60 litres). After each run, the volume indicated by the dispenser is compared to the volume indicated by the master meter. From this information, the dispenser can be adjusted as necessary.

The MML series of master meters bring calibration of a dispenser to a similar level of simplicity. The PC software hides all the complex and tedious calculations, corrections and adjustments. The end result is a simple, reliable and efficient step-by-step calibration procedure.

Transportability

The MML series of master meters are also very compact. Figure 3 and Figure 4 show a master meter installed in a service van.

Copyright © 1999 LPG Measurement Technology (Australia) Pty. Ltd.
Unauthorised use, copying or distribution prohibited.

Figure 3: Master Meter installed in service van

Figure 4: Master Meter installed in service van (closeup)

The master meter only occupies a small section of space in a service van, and can be lifted out for servicing and recalibration.

Copyright © 1999 LPG Measurement Technology (Australia) Pty. Ltd.
Unauthorised use, copying or distribution prohibited.

Product models

LPG Measurement Technology LPG Master Meters come in two main configurations. The hydraulics and processing electronics are the same on both models. Refer to Table 1 below.

Table 1: LPG Master Meter product number

Product number	Description
MML1999EL	LPG Master Meter with entry-level PC aqcuisition software
MML1999CS	LPG Master Meter "Deluxe Calibration System" with complete PC acquisition, analysis and storage software.

SYSTEM DATA

Hydraulic system data

The master meter hydraulic section facilitates flow of liquid LPG through the meter, and is illustrated in Figure 5 below.

Copyright © 1999 LPG Measurement Technology (Australia) Pty. Ltd.
Unauthorised use, copying or distribution prohibited.

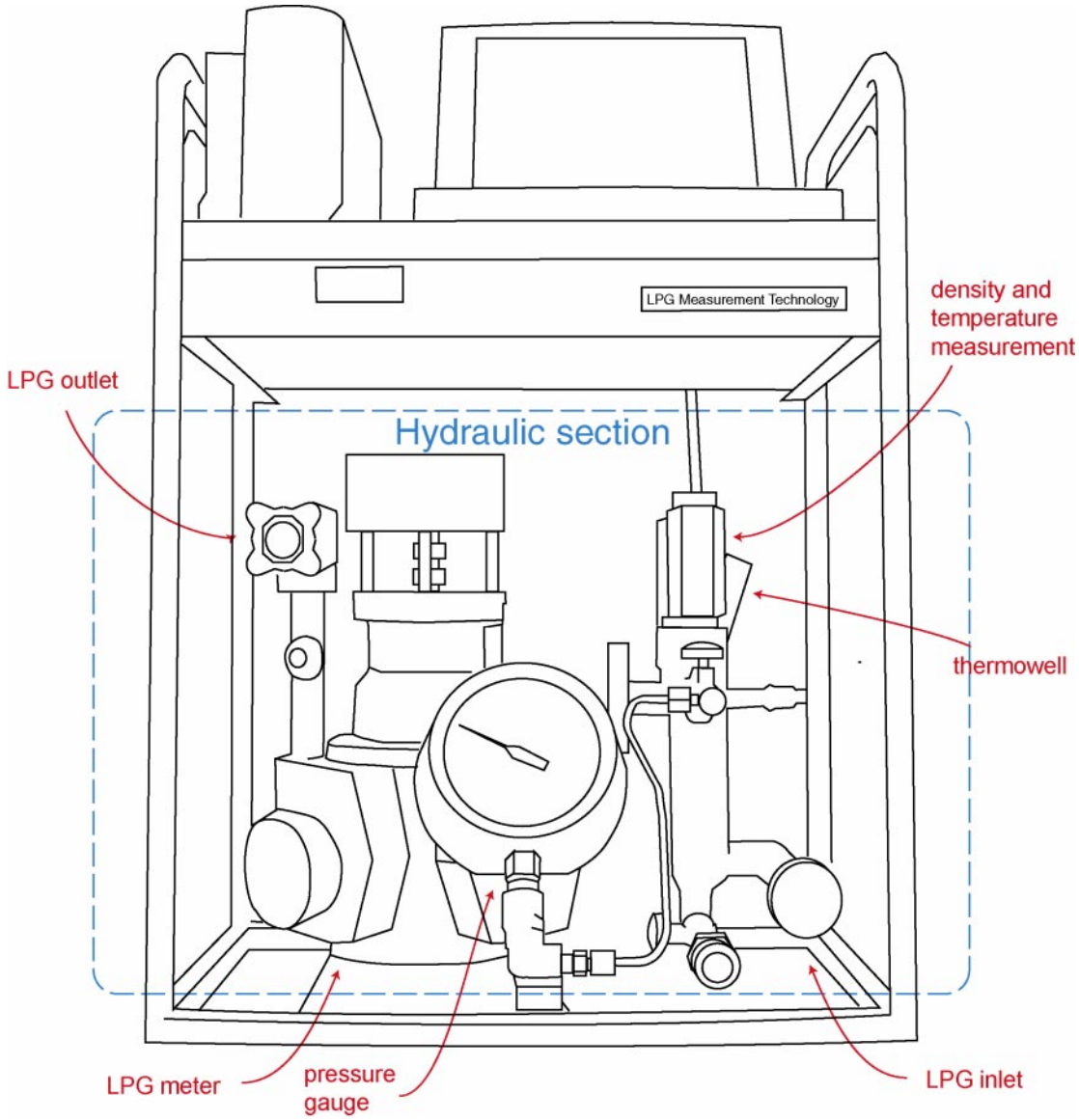

Figure 5: Master Meter hydraulic section

LPG enters the inlet, and flows past the LPG probe. The LPG probe detects vapour, provides a measure of the LPG density and measures the liquid temperature. The LPG then enters the measuring chamber of the meter. Volume passing through the meter is indicated by rotation of a shaft on top of the meter. This shaft is connected to an optical encoder which is used by the onboard microprocessor to indicate the volume delivered. The LPG then exits the master meter through the outlet, via a manual control valve.

The hydraulic system also contains a 1/2" female NPT in-line coupling for connection of a pressure measurement device to allow measurement of LPG pressure.

The onboard electronics processes data from the LPG probe and meter shaft and transmits this information in real-time to an attached PC via a standard serial connection.

Copyright © 1999 LPG Measurement Technology (Australia) Pty. Ltd.
Unauthorised use, copying or distribution prohibited.

Specifications

Structural/Operational	
Dimensions (HWD)	670 x 500 x 350 mm (without PC)
Nominal weight	Approx 85 kg (without PC)
Pipework	ASTMA-106 seamless tube
Fittings	ASTMA-105
Construction	Constructed by certified welding technician
LPG inlet	¾" NPT female
LPG outlet	¾" NPT female
Additional line coupling	½" NPT female (usually for pressure measurement device)
Meter	Tatsuno, Prime or Nuovo Pignone
LPG flow rate range	10-50 litres per minute
Calibration	Can be calibrated down to ±0.1% uncertainty by volume (95% confidence)
LPG probe	Density 500 to 560 kg/m^3 Temperature –40 to +60 °C

Power	
Power requirements	12V DC, 1 A

Table 2: Hydraulic section specifications

MasterCal Standard software data - entry-level data aqcuisition

The MasterCal Standard software package provides basic functionality at minimal expense. The software has the following features:

- Simple, graphical user interface
- Specification of LPG density directly or from master meter LPG probe
- Real-time monitoring of master meter
- Execution and real-time monitoring of calibration runs, with display of run results at the completion of the run, including
  - (a) Total volume metered (at test conditions)
  - (b) Total volume metered (at 15°C and metered pressure)
  - (c) LPG density
  - (d) Average LPG temperature
  - (e) Average LPG volume correction factor (for correction to 15°C)
- Master meter calibration period expiry checking and warning system

Copyright © 1999 LPG Measurement Technology (Australia) Pty. Ltd.
Unauthorised use, copying or distribution prohibited.

Key software components

The MasterCal Standard software is broken down into a number of key components. All components are accessed from the Control Center.

Control Center

The MasterCal Standard software provides a simple Control Center to the user, as shown in Figure 6 below.

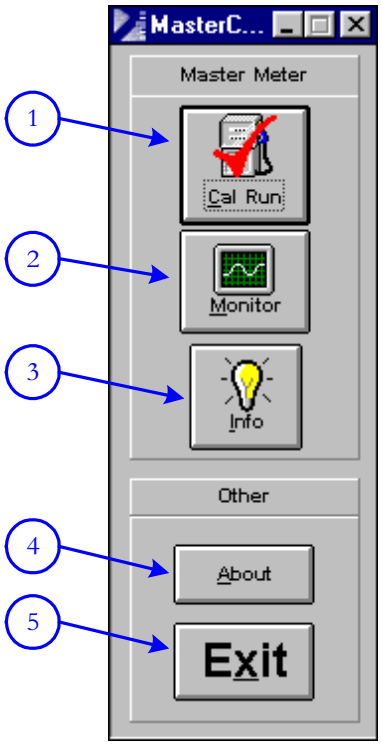

Figure 6: MasterCal Standard Control Center

A single calibration run can be started by clicking on the "Cal Run" button (1) The master meter can be monitored in real-time by clicking on the "Monitor" button (2). Information about the software setup and master meter calibration can be displayed by clicking on the "Info" button (3).

The MasterCal software can be closed by clicking the "Exit" button (5).

Calibration Run

When the "Cal Run" button is clicked, the live-action window appears. A snapshot of the window during a calibration run is shown in Figure 7 below.

Copyright © 1999 LPG Measurement Technology (Australia) Pty. Ltd.
Unauthorised use, copying or distribution prohibited.

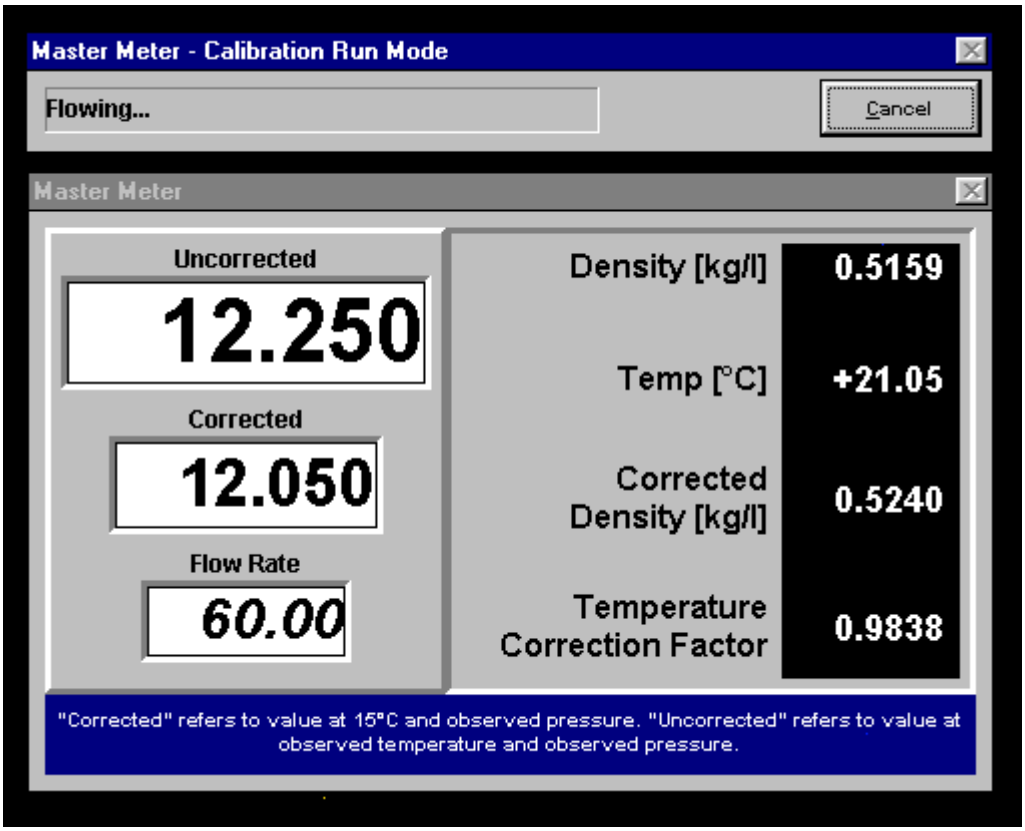

Figure 7: MasterCal calibration live-action snapshot

The display shows the progress of the calibration run, including:

- Volume delivered (at test conditions and at 15°C)
- Liquid flow rate
- Liquid density
- Liquid temperature
- Volume correction factor (for correction to 15°C)

The software will not initialise while liquid is flowing through the master meter. Once flow is stopped, the calibration run is initialised and the system waits for the start of liquid flow. When flow starts, the software automatically begins recording the calibration run. When the desired volume has passed through the master meter and the operator stops liquid flow, the software automatically finishes monitoring and displays a results summary as shown in Figure 8 below.

Copyright © 1999 LPG Measurement Technology (Australia) Pty. Ltd.
Unauthorised use, copying or distribution prohibited.

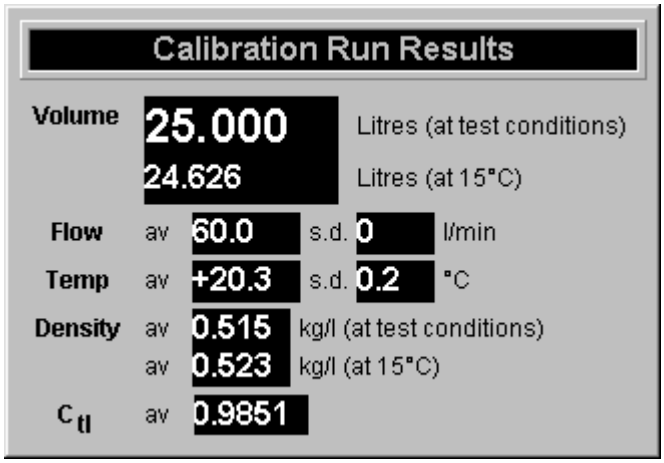

Figure 8: MasterCal Standard calibration run summary

Monitoring the Master Meter

When the "Monitor" button is clicked, the live-action window appears as previously shown in Figure 7. A snapshot of the window during a calibration run is the same as shown in Figure 7 previously.

Unlike the calibration run, the monitoring process does not stop automatically when flow stops. Flow can stop and start as many times as necessary. No summary information is presented, and the user must explicitly cancel monitoring by clicking the "Cancel" button.

Displaying Master Meter information

When the "Info" button is clicked, the information window appears as shown in Figure 9 below.

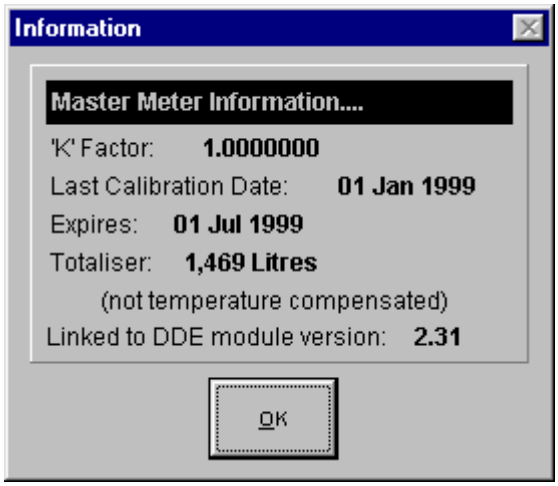

Figure 9: MasterCal Standard information window

This window displays important information about the calibration system, including:

Copyright © 1999 LPG Measurement Technology (Australia) Pty. Ltd.
Unauthorised use, copying or distribution prohibited.

- The calibration factor for the master meter
- Date on which the master meter was last calibrated
- The date on which the current master meter calibration expires
- The number of litres that the software has tracked through the meter

Specifications

Software requirements	
PC hardware	Pentium 120 (or equivalent) or better 16 MB memory 5 MB hard disk space for application Mouse VGA-level display (SVGA recommended) 1 available serial port
Operating System	Microsoft Windows™ 95 or 98

Table 3: MasterCal Standard specifications

MasterCal Deluxe software data - complete calibration management

The MasterCal Deluxe software is a complete calibration management system. The software has the following extensive list of features:

- Microsoft Excel™ based system - familiar graphical user interface
- Real-time monitoring of master meter
- Execution, real-time data acquistion, processing and storage of calibration run data.
- Storage of up to 40 calibration runs per unit under test, groupable into up to 4 distinct flow rate groups
- Entry and storage of site information, operator and additional works data
- Comprehensive, customisable, multi-page calibration reports, including plots of unit under test performance against flow rate
- "Calibration wizard" leads the operator through the complete calibration procedure, step-by-step
- Fully-automatic correction for:
  - (a) Temperature compensation
  - (b) Propane/butane mixture (ie. density) compensation
  - (c) Pressure compensation
- Built-in measurement device calibration information storage, with:
  - (a) Automatic scale/indicator reading correction
  - (b) Automatic calibration expiry warning system

Copyright © 1999 LPG Measurement Technology (Australia) Pty. Ltd.
Unauthorised use, copying or distribution prohibited.

- Specification of LPG density:
  (a) from master meter LPG probe, or
  (b) from a density hydrometer, or
  (c) directly
- Specification of liquid temperature in master meter meter chamber during run:
  (a) from master meter LPG probe, or
  (b) from a temperature measurement device, or
  (c) directly
- Specification of pressure in master meter meter chamber during run:
  (a) from a pressure measurement device, or
  (b) directly
- Specification of liquid temperature in unit under test meter chamber during run:
  (a) same as master meter, or
  (b) from a temperature measurement device, or
  (c) directly
- Specification of pressure in unit under test meter chamber during run:
  (a) same as master meter, or
  (a) from a pressure measurement device, or
  (b) directly
- Data corruption protection. Checksum validation of MasterCal program files and master meter calibration information. Corruption in application or master meter calibration information will be detected and warnings issued.
- Standard Edition software also included

Key components of the software

The MasterCal Deluxe software is broken down into a number of key components. All components are accessed from the Control Center.

Control Center

The MasterCal Deluxe software provides a simple Control Center to the user, as shown in Figure 10 below. The main feature is the toolbar, which can be used to automate a complete LPG dispenser calibration as a step-by-step procedure.

Copyright © 1999 LPG Measurement Technology (Australia) Pty. Ltd.
Unauthorised use, copying or distribution prohibited.

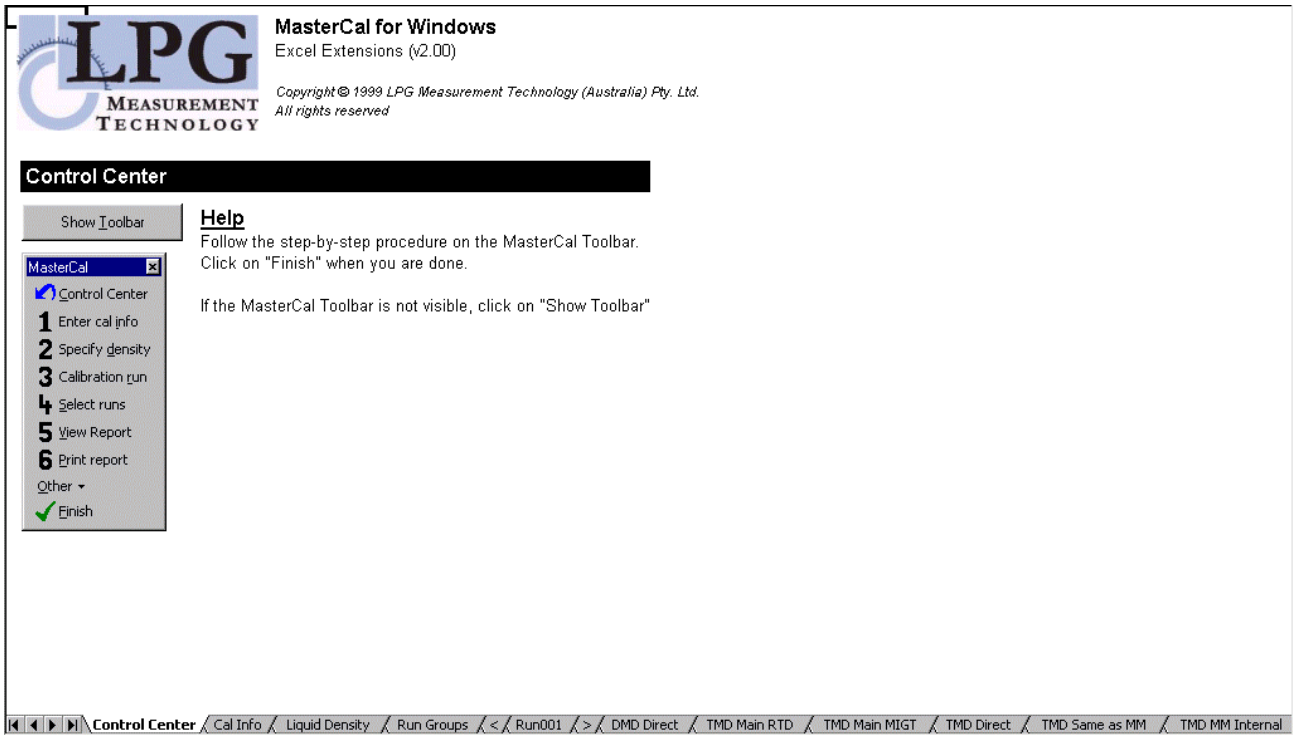

Figure 10: MasterCal Deluxe Control Center

The toolbar leads the operator through a six-step process for calibration of a master meter.

The first step is to enter calibration information

. A whole range of detailed information about the calibration can be entered, including:

- Report number
- Date calibration performed
- Operator information
- Site identity and address
- Unit under test details (make, model, location on site, meter identifiers, approval numbers)
- Additional notes

Once this data is entered, the next step is to specify the liquid density

. This is typically specified as a hydrometer measurement of observed density at a specific temperature. Hydrometer and temperature measurement device scale calibration information will be applied so that the operator simply enters the observed density and temperature scale/indicator readings. These are automatically corrected, and the observed density is automatically corrected to 15°C.

Alternatively, observed density and temperature can be specified directly.

Copyright © 1999 LPG Measurement Technology (Australia) Pty. Ltd.
Unauthorised use, copying or distribution prohibited.

The next step is to perform calibration runs by choosing 3 Calibration run. The calibration run then proceeds with the same live-action display as MasterCal Standard edition (see Figure 7).

Once the calibration run is finished, the operator is prompted to enter the liquid temperature and pressure at the master meter, as shown in Figure 11 below.

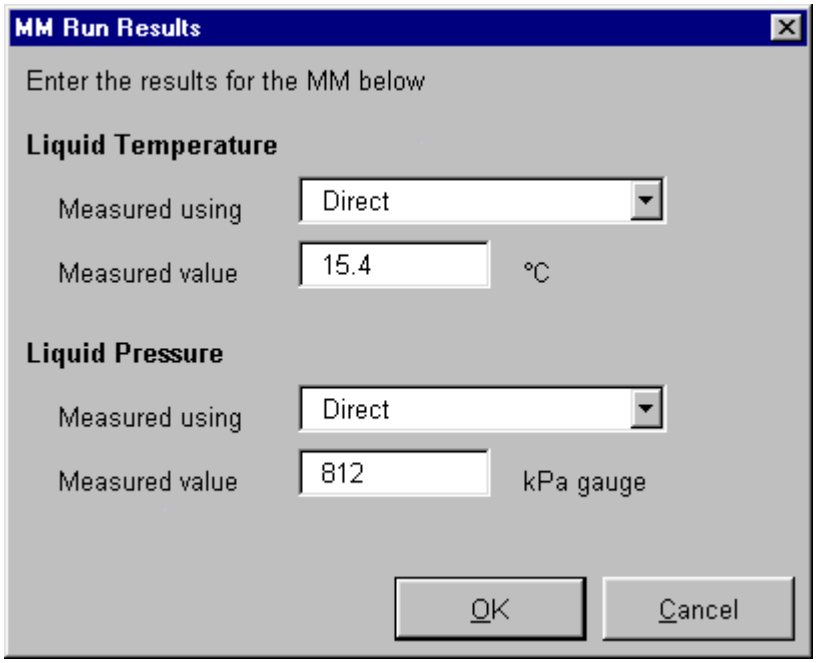

Figure 11: Master Meter results entry

Liquid temperature can be specified as a temperature measurement device scale/indicator reading, and will be automatically corrected according to the device calibration data. Alternatively, the liquid temperature measured by the master meter can be applied automatically or an exact temperature specified directly.

Once master meter data is entered, the operator is prompted to input results indicated for the unit under test (UUT), as shown in Figure 12 below.

Copyright © 1999 LPG Measurement Technology (Australia) Pty. Ltd.
Unauthorised use, copying or distribution prohibited.

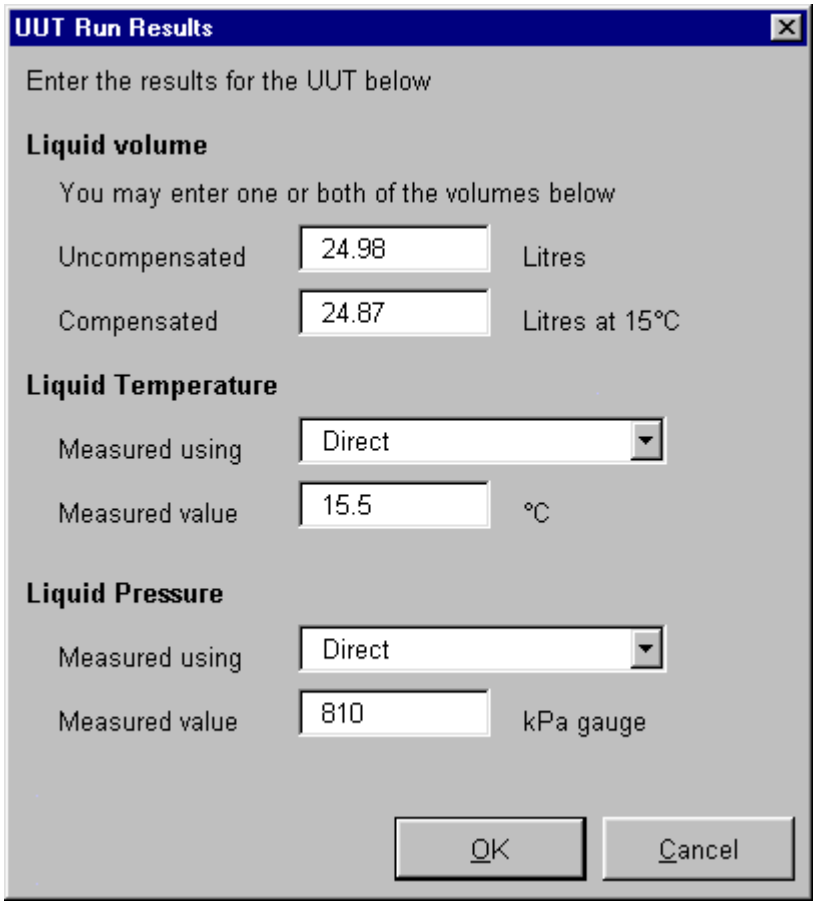

Figure 12: Unit under test results entry

The information that can be entered is as follows:

- Volume indicated (at liquid temperature and pressure at UUT)
- Volume indicated (at 15°C and pressure at UUT)
- Liquid temperature at UUT (from a temperature measurement device scale/indicator reading, set equal to temperature at master meter or directly specified)
- Liquid pressure at UUT (from a pressure measurement device scale/indicator reading, set equal to pressure at master meter or directly specified)

All these measurements are applied to calculate estimates for:

- Error in UUT indicated volume (at liquid temperature during run)
- Error in UUT indicated volume (at 15°C)
- Error in UUT temperature compensator

The calibration run process can be repeated up to 40 times at various flowrates. These results can then be grouped into up to four flow-rate groups. Averages of UUT errors can then be calculated to obtain a more accurate estimate of UUT errors. Adjustments for the UUT are also calculated.

Copyright © 1999 LPG Measurement Technology (Australia) Pty. Ltd.
Unauthorised use, copying or distribution prohibited.

When all data has been gathered and entered, the report can be viewed (by clicking 5 View Report) and printed (by clicking 6 Print report). A sample report is shown on the pages that follow (Figure 13, Figure 14 and Figure 15).

Copyright © 1999 LPG Measurement Technology (Australia) Pty. Ltd.
Unauthorised use, copying or distribution prohibited.

Calibration Report

For calibration of an LPG flowmeter using an LPG Master Meter system

Report Number	**0003**
Date of Calibration	08 Apr 1999
Operator	John Clark ID:245A
Unit Under Test	
Make	Europump LPG Dispenser
Model	3A
Approval number	123A
Meter serial	345-A-FX
Hose number (if multi-hose UUT)	1
Hose ID used by site	12
K Factor before calibration	1.00210
K Factor applied after calibration	1.01500
Calibration Device (Master Meter)	
Description	LPGMT Master Meter
Serial number	LPGMM9801
Meter serial number	8M-350
Date calibrated	21 Sep 1998
Liquid density at 15°C [kg/m³]	513.60
Notes	

UUT Totaliser (Litres)	
Before	100345
After	100780
Difference	435
Less sold	0
Total	435

Calibration Results:
UUT is within MPE
Seals Broken

Error in UUT Volume at test temperate and pressure

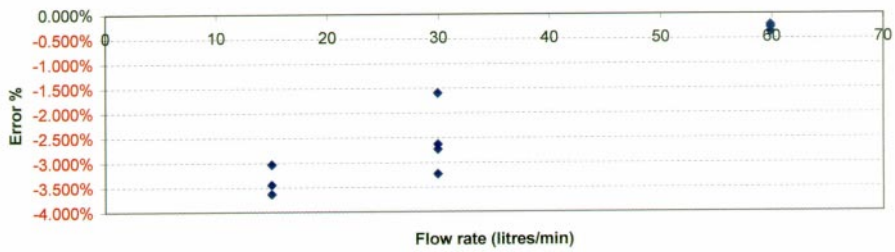

LPG Measurement Technology Pty. Ltd.
85A Cantebury Rd
Kilsyth, Victoria, 3137
Australia
Ph: (03)97618788 Fax: (03)97618799

This report may not be reproduced in whole or in part without written permission from the Head of the Company issuing this report.

Signed:

Figure 13: MasterCal Deluxe report (demonstration) page 1

Copyright © 1999 LPG Measurement Technology (Australia) Pty. Ltd.
Unauthorised use, copying or distribution prohibited.

Calibration Report (continued)

Report 0003

Group	Description	Units	Flow rate group 1				
			1	2	3	4	
Master Meter	Nominal flow rate	Litres/min	59.9	59.9	59.9	59.9	
	Volume (at MM temp and pressure)	Litres	49.389	49.887	49.887	49.887	
	Volume (at 15°C and MM pressure)	Litres	49.230	49.718	49.688	49.648	
	...using temp correction factor		0.99680	0.99660	0.99600	0.99520	
	Liquid temperature	°C	16.100	16.200	16.500	16.700	
	Liquid pressure	kPa	900.0	910.0	920.0	930.0	
Unit Under Test	Indicated volume (at UUT temp and pressure)	Litres	49.300	49.730	49.780	49.780	
	...corrected to 15°C	Litres	49.123	49.541	49.561	49.521	
	...using temp correction factor		0.99640	0.99620	0.99560	0.99480	
	...corrected to 15°C and MM pressure	Litres	49.120	49.540	49.555	49.515	
	...using pressure correction factor		0.99995	0.99998	0.99988	0.99988	
	Indicated volume (at 15°C and UUT pressure)	Litres	49.210	49.650	49.630	49.690	
	Liquid temperature	°C	16.300	16.400	16.600	16.800	
	Liquid pressure	kPa	890.0	905.0	895.0	905.0	
Errors	Error in UUT volume at UUT temp and pressure	%	-0.224%	-0.358%	-0.268%	-0.268%	
	Error in UUT volume at 15°C	%	-0.047%	-0.139%	-0.129%	0.072%	
	Component of error in UUT temp compensator	%	0.178%	0.220%	0.139%	0.341%	
							Average
							-0.279%
							-0.060%
							0.220%

Group	Description	Units	Flow rate group 2				
			5	6	7	8	
Master Meter	Nominal flow rate	Litres/min	29.9	29.9	29.9	29.9	
	Volume (at MM temp and pressure)	Litres	49.887	49.887	49.887	49.389	
	Volume (at 15°C and MM pressure)	Litres	49.588	49.578	49.558	49.043	
	...using temp correction factor		0.99400	0.99380	0.99340	0.99300	
	Liquid temperature	°C	17.000	17.100	17.300	17.500	
	Liquid pressure	kPa	950.0	955.0	960.0	955.0	
Unit Under Test	Indicated volume (at UUT temp and pressure)	Litres	48.600	48.550	48.300	48.630	
	...corrected to 15°C	Litres	48.299	48.239	47.972	48.270	
	...using temp correction factor		0.99380	0.99360	0.99320	0.99260	
	...corrected to 15°C and MM pressure	Litres	48.287	48.227	47.960	48.261	
	...using pressure correction factor		0.99975	0.99975	0.99975	0.99980	
	Indicated volume (at 15°C and UUT pressure)	Litres	48.500	48.450	48.150	48.550	
	Liquid temperature	°C	17.100	17.200	17.400	17.600	
	Liquid pressure	kPa	900.0	905.0	910.0	915.0	
Errors	Error in UUT volume at UUT temp and pressure	%	-2.624%	-2.725%	-3.225%	-1.595%	
	Error in UUT volume at 15°C	%	-2.218%	-2.300%	-2.865%	-1.024%	
	Component of error in UUT temp compensator	%	0.417%	0.437%	0.372%	0.580%	
							Average
							-2.542%
							-2.102%
							0.451%

This report may not be reproduced in whole or in part without written permission from the Head of the Company issuing this report.

Signed:

Figure 14: MasterCal Deluxe report (demonstration) page 2

Copyright © 1999 LPG Measurement Technology (Australia) Pty. Ltd.
Unauthorised use, copying or distribution prohibited.

Calibration Report (continued)

Report 0003

Group	Description	Units	Flow rate group 3			
			9	10	11	
Master Meter	Nominal flow rate	Litres/min	15.0	15.0	15.0	
	Volume (at MM temp and pressure)	Litres	49.887	49.887	49.887	
	Volume (at 15°C and MM pressure)	Litres	49.438	49.428	49.399	
	...using temp correction factor		0.99100	0.99080	0.99020	
	Liquid temperature	°C	18.000	18.100	18.400	
	Liquid pressure	kPa	980.0	990.0	990.0	
Unit Under Test	Indicated volume (at UUT temp and pressure)	Litres	48.400	48.200	48.100	
	...corrected to 15°C	Litres	47.945	47.737	47.619	
	...using temp correction factor		0.99060	0.99040	0.99000	
	...corrected to 15°C and MM pressure	Litres	47.943	47.728	47.607	
	...using pressure correction factor		0.99995	0.99980	0.99975	
	Indicated volume (at 15°C and UUT pressure)	Litres	48.300	48.100	48.050	
	Liquid temperature	°C	18.200	18.300	18.500	
	Liquid pressure	kPa	970.0	950.0	940.0	
Errors	Error in UUT volume at UUT temp and pressure	%	-3.025%	-3.441%	-3.626%	Average
	Error in UUT volume at 15°C	%	-2.308%	-2.707%	-2.754%	-3.364%
	Component of error in UUT temp compensator	%	0.740%	0.780%	0.905%	-2.589%
						0.802%

Group	Description	Units	Flow rate group 4			
Master Meter	Nominal flow rate	Litres/min				
	Volume (at MM temp and pressure)	Litres				
	Volume (at 15°C and MM pressure)	Litres				
	...using temp correction factor					
	Liquid temperature	°C				
	Liquid pressure	kPa				
Unit Under Test	Indicated volume (at UUT temp and pressure)	Litres				
	...corrected to 15°C	Litres				
	...using temp correction factor					
	...corrected to 15°C and MM pressure	Litres				
	...using pressure correction factor					
	Indicated volume (at 15°C and UUT pressure)	Litres				
	Liquid temperature	°C				
	Liquid pressure	kPa				
Errors	Error in UUT volume at UUT temp and pressure	%				Average
	Error in UUT volume at 15°C	%				
	Component of error in UUT temp compensator	%				

This report may not be reproduced in whole or in part without written permission from the Head of the Company issuing this report.

Signed:

Figure 15: MasterCal Deluxe report (demonstration) page 3

Copyright © 1999 LPG Measurement Technology (Australia) Pty. Ltd.
Unauthorised use, copying or distribution prohibited.

Specifications

Software requirements	
PC hardware	Pentium 120 (or equivalent) or better 32 MB memory 60 MB hard disk space for application Mouse SVGA display 1 available serial port
Operating System	Microsoft Windows™ 95 or 98
Additional software	Microsoft Excel™ 97 (or later)

Table 4: MasterCal Deluxe specifications

Copyright © 1999 LPG Measurement Technology (Australia) Pty. Ltd.
Unauthorised use, copying or distribution prohibited.

CONTACT US

For more information, contact us using any of the methods below:

Visit us:	LPG Measurement Technology Pty. Ltd. 85A Canterbury Rd Kilsyth, VIC, 3137 Australia
Mail:	LPG Measurement Technology Pty. Ltd. PO Box 199 Kilsyth, VIC, 3137 Australia
Telephone:	Within Australia, call (03) 9761 8788 Outside Australia, call +61 3 9761 8788
Fax:	Within Australia, call (03) 9761 8799 Outside Australia, call +61 3 9761 8799
Email:	support@lpgmt.com
Visit our website:	http://www.lpgmt.com

(end of document)

Copyright © 1999 LPG Measurement Technology (Australia) Pty. Ltd.
Unauthorised use, copying or distribution prohibited.